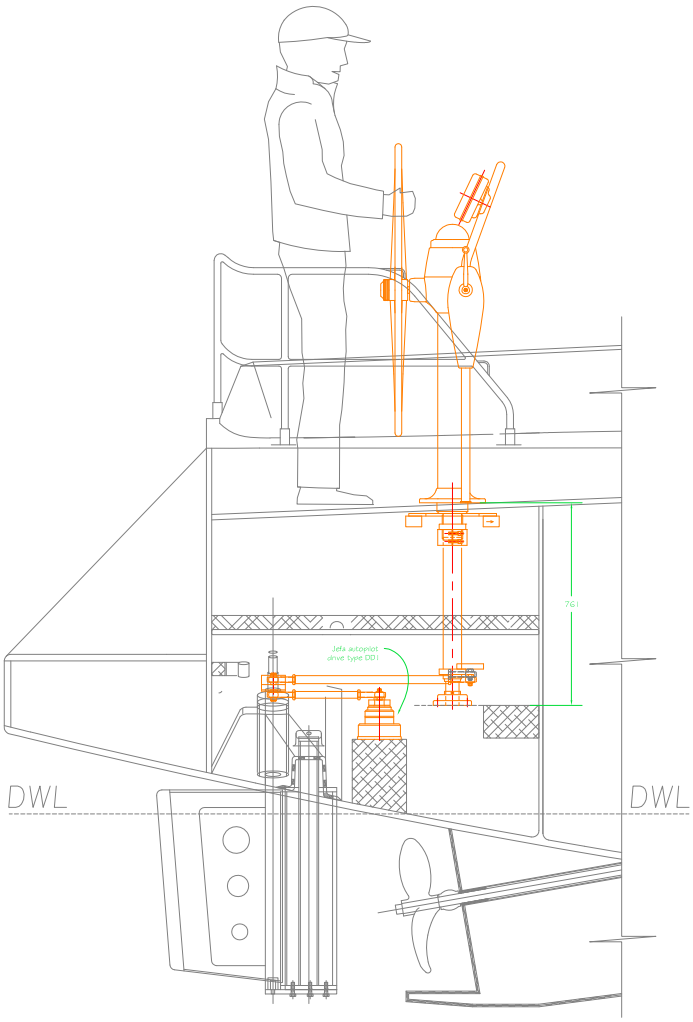

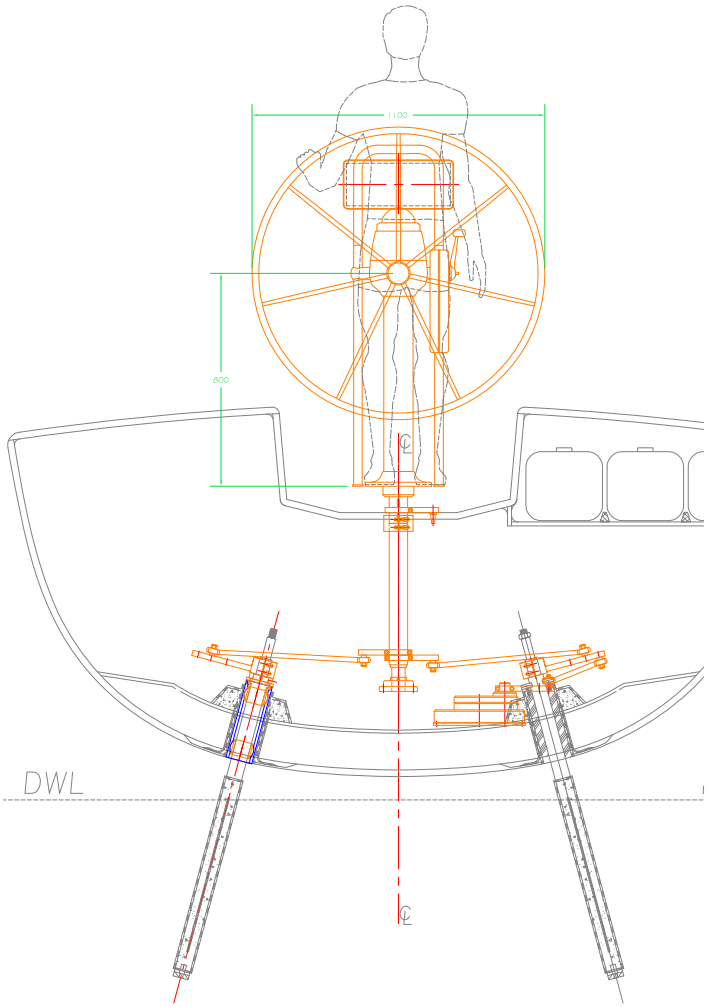

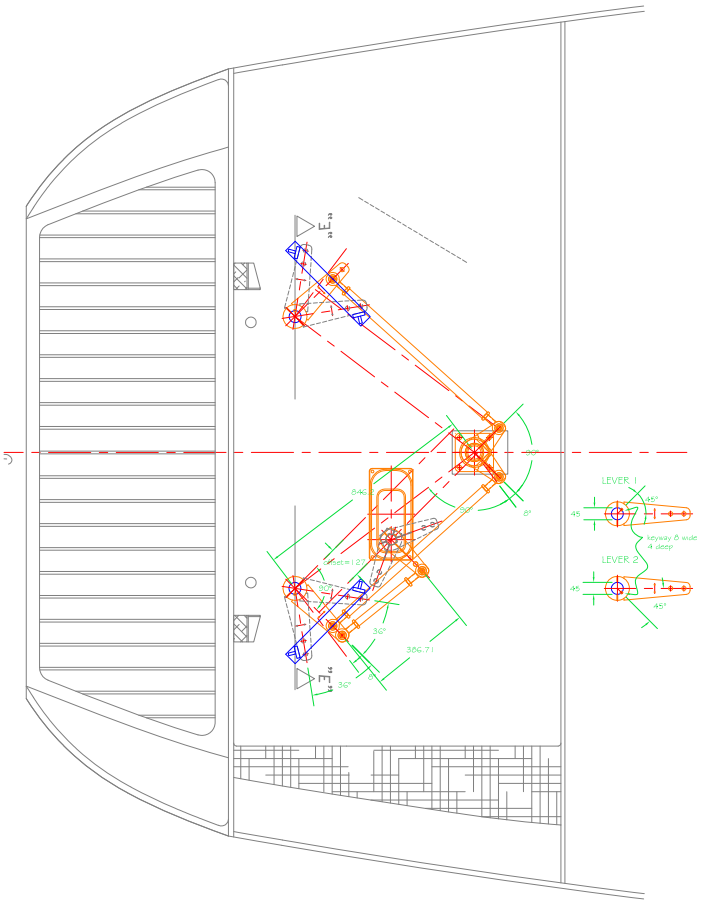

Jefa Steering
SYSTEMS

Modify date	Project: Jefa rudder & steering system for the Explorer 39		Jefa Steering SYSTEMS Nimbusvej 2 2670 Greve. Denmark Phone:+45-4615 5210 Fax: +45-4615 5208 www.jefa.com
Modify date			
Modify date	Scale 1:1	Date 04.04.2006	
Modify date	Material —	Drawing no. —	
Modify date	Filename (dwg) Explorer 39 Jefa-V1.dwg		
Modify date	Drawn by A.G.		